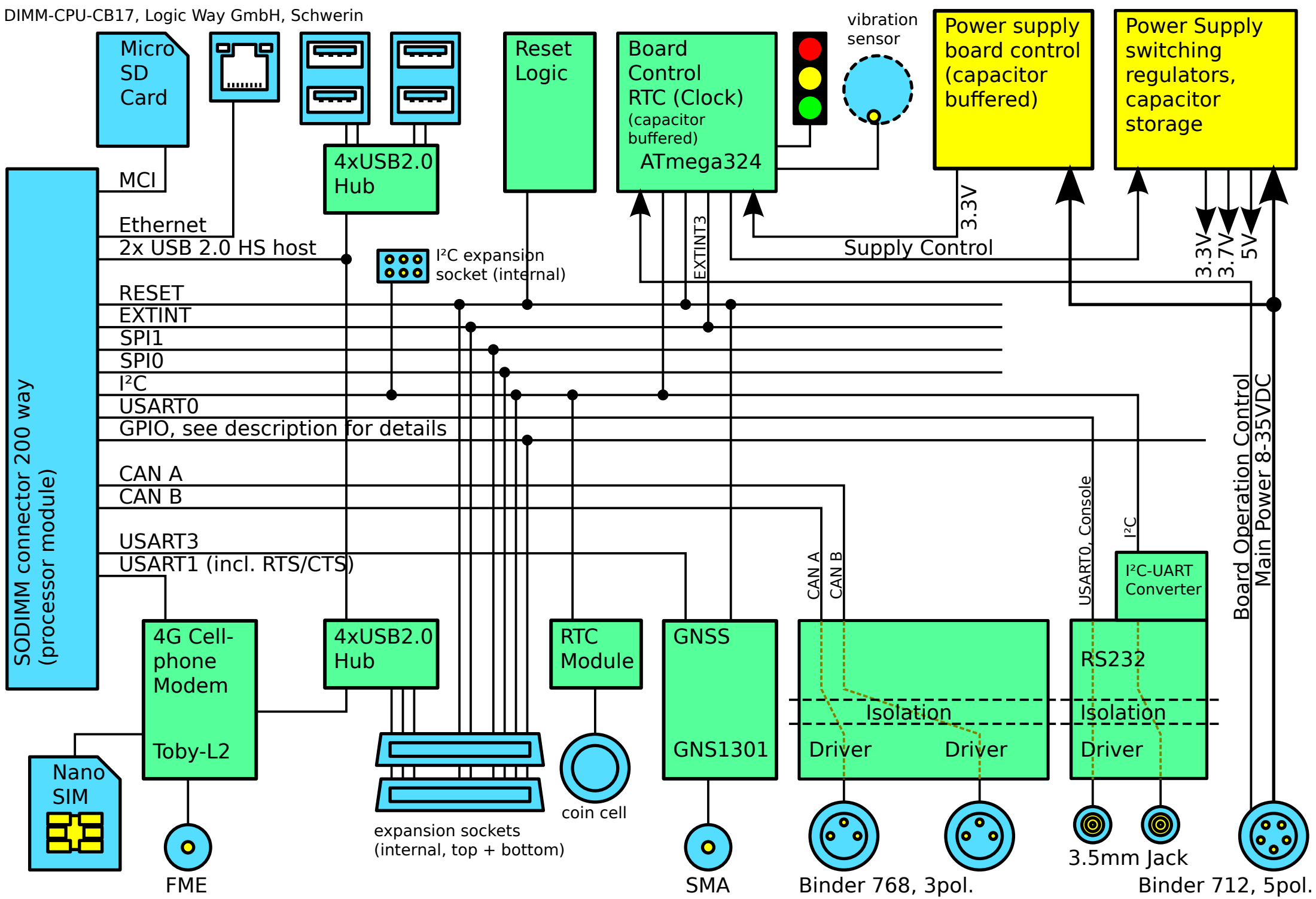
DIMM-CPU-CB17, Logic Way GmbH, Schwerin
Micro SD Card
4xUSB2.0 Hub
Reset Logic
Board Control RTC (Clock) (capacitor buffered) ATmega324
vibration sensor
Power supply board control (capacitor buffered)
Power Supply switching regulators, capacitor storage
SODIMM connector 200 way (processor module)
MCI
Ethernet
2x USB 2.0 HS host
I²C expansion socket (internal)
EXTINT3
3.3V
Supply Control
3.3V
3.7V
5V
RESET
EXTINT
SPI1
SPI0
I²C
USART0
GPIO, see description for details
CAN A
CAN B
USART3
USART1 (incl. RTS/CTS)
USART0, Console
I²C
I²C-UART Converter
Board Operation Control
Main Power 8-35VDC
CAN A
CAN B
4G Cell-phone Modem
Toby-L2
4xUSB2.0 Hub
RTC Module
GNSS
GNS1301
Isolation
Driver
Driver
RS232
Isolation
Driver
Nano SIM
FME
expansion sockets (internal, top + bottom)
coin cell
SMA
Binder 768, 3pol.
3.5mm Jack
Binder 712, 5pol.